PA-6822

Quick Reference Guide

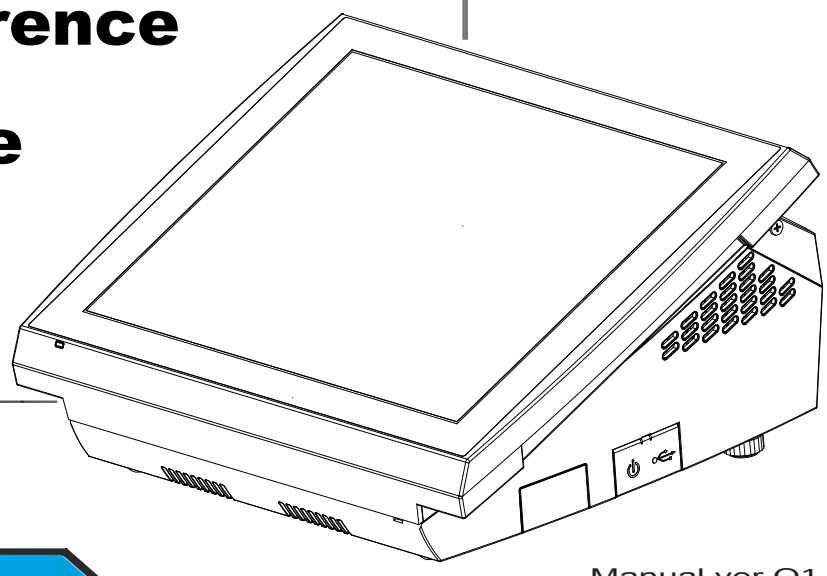

Manual ver Q1

Packing Checklist

If you discover any item below was damaged or lost, please contact your vendor.

- ☑ PA-6822 X 1
- ☑ This Quick Reference Guide X 1
- ☑ AC Power Adaptor X 1
- ☑ Driver CD X 1

Specifications

System	CPU Support	Intel® Celeron® J1900
	Memory	DDR3L SO-DIMM (1 slot, up to 8GB)
	Network	10/100/1000 Base-T Fast Ethernet
	Power Supply	72~120Watt power adapter
	Audio	2W speaker
	System Weight	with power adaptor approx. 7.5kg
	Dimension	390 x 320 x 190mm
	O.S. Support	WIN8 / POSReady7
Storage	SATA	1 x 2.5" HDD or SSD
	mSATA	1 x SSD
I/O Port	USB	4 x USB on rear, 1 x USB on side bezel
	Serial Port	3 + 1(option) x DB9 (+5V/ 12V selectable)
	LAN	1 x RJ45
	VGA	1 x DB15
	Line Out	1 x phone jack
	Cash Drawer	1 + 1(option Y cable) x RJ11 (+12V or +24V selectable)
	DC-in	1 x 4pin DC Power Jack
	LPT	1 x DB25(option)
Periphe-ral	Customer Display	VFD, 20 columns and 2 lines, each column is 5 x 7 dots
	Printer	2" or 3" easy loading thermal printer with Auto cutter
	MSR & iButton	ISO I,II,III; JIS I,II and support information key
	RFID	ISO14443A, Mifare, Felica-Lite
	2nd Display	8" or 10.4" LCD
	Fingerprint	8-bit grayscale, reader
Display	LCD	15" TFT LCD
	Resolution	1024 x 768
	Brightness	250 cd/m²
	Touch Screen	Bezel-Free 5-wire Analog resistive or Projected Capacitive
Environ-ment	EMC & Safety	CE / FCC
	Operating Temp.	0 ~ 35° C
	Storage Temp.	-5 ~ 60° C
	Humidity	20 ~ 90%

System View

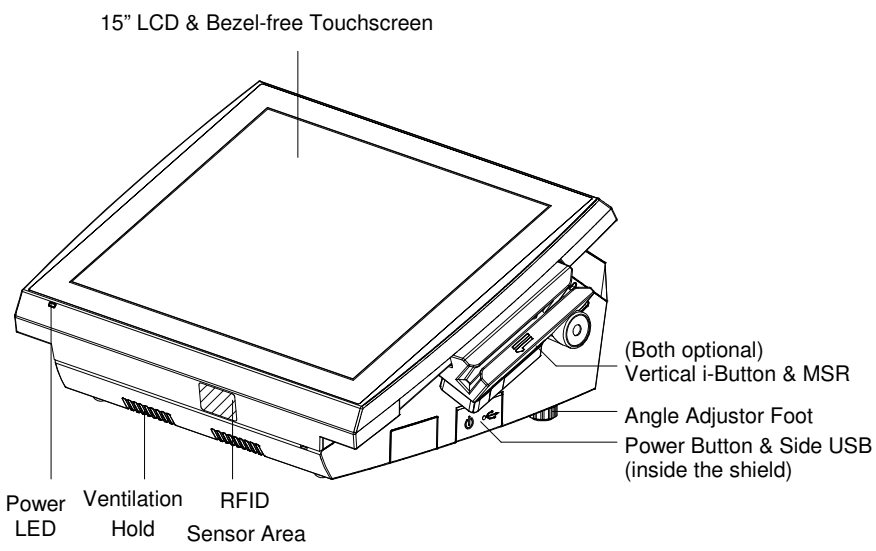

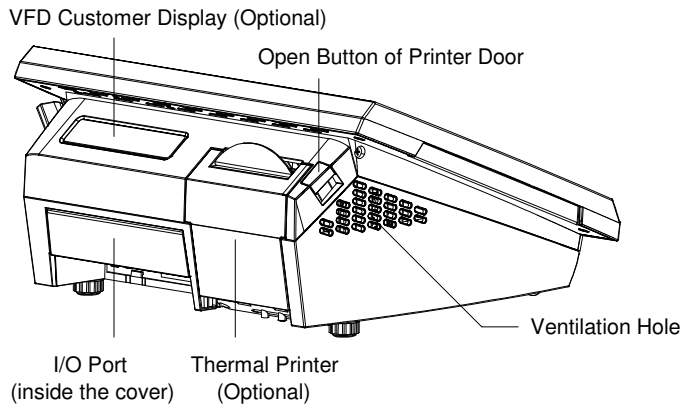

PA-6822

The One-of-a-kind Highly Integrated 15” POS Terminal

Easy Maintenance

HDD Maintenance

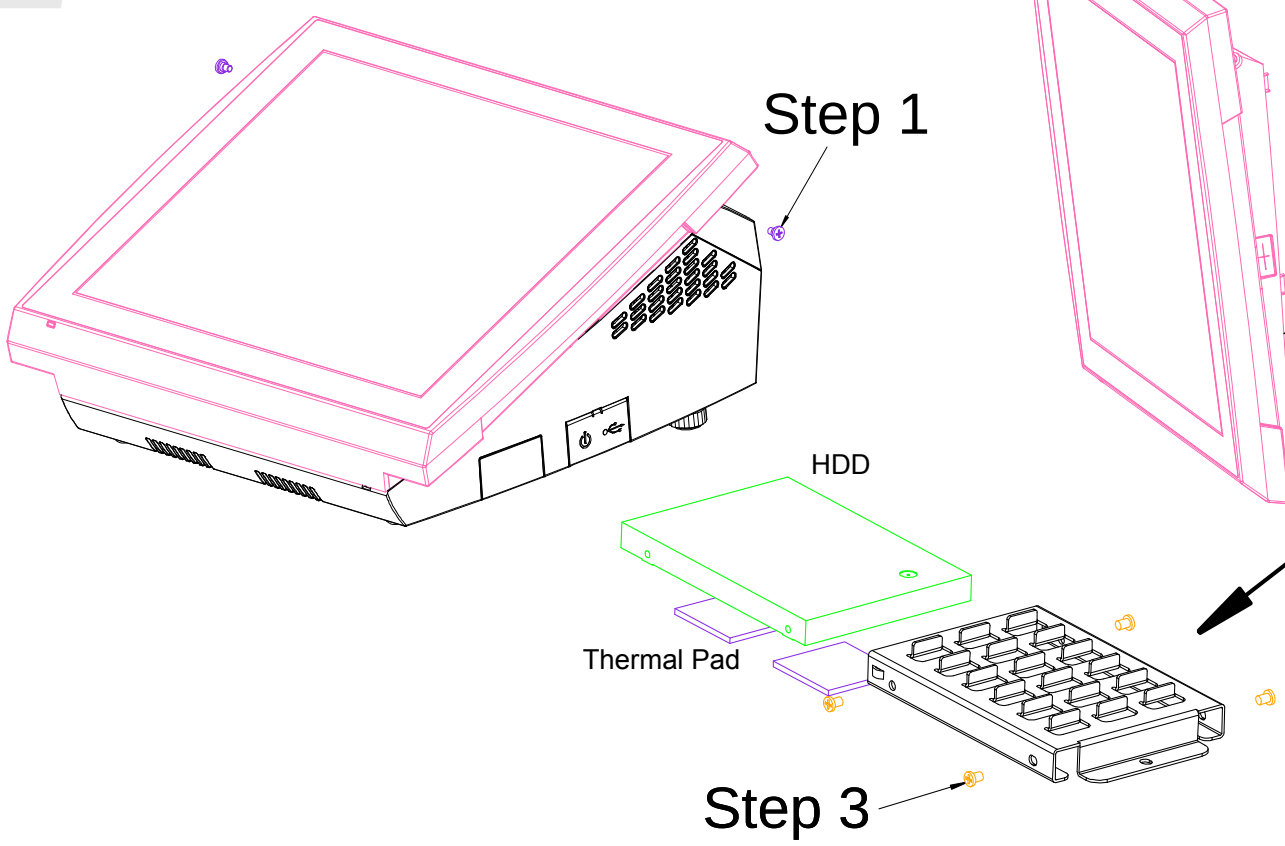

COM & Casher Power

COM2 / COM3 / Cash Drawer

1. Voltage of external ports "COM2 & COM3 & Cash Drawer" are made to control on BIOS for your convenience. The corresponding jumpers "JP_COM2~3", "JP29" are set open (no jumper connection) by default.
2. "JP_COM2", "JP_COM3", "JP29" are enabled when voltage adjustment is disabled on BIOS
3. Voltage control is adjustable by BIOS or jumpers. Either way cannot be applied simultaneously in case of system error, component damage or serious boot failure.

COM1 / COM4

Voltage of COM1 & COM4 ports are made to control by jumpers on board.

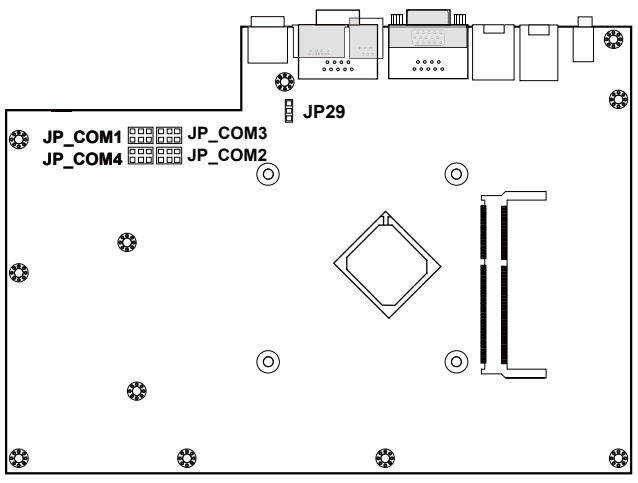

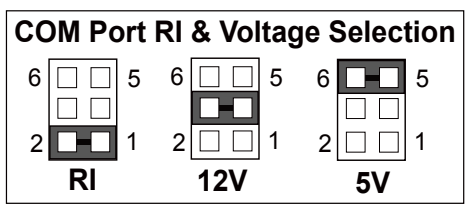

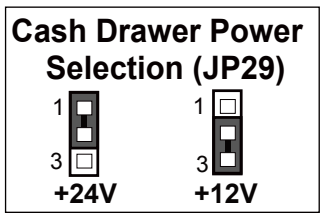

Safety Precaution

The following messages are safety reminders on how to protect your systems from damages, and extending the life cycle of the system.

1. Check the Line Voltage

- Make sure the operating voltage range is between 100V and 240V AC; otherwise, the system could be damaged.

2. Environmental Conditions

- Place your PA-6822 on a sturdy, level surface. Be sure to allow enough space around the system to have easy access needs.
- Avoid installing the system in extremely hot or cold places.
- Avoid exposure to sunlight for a long period of time or in an airtight room.
- Also, avoid the system from any heating device or using the PA-6822 when it has been left outdoors in a cold winter day.
- Bear in mind that the operating ambient temperature is between 0°C and 35°C (32°F~ 95°F).
- Avoid moving the system rapidly from a hot place to a cold place, and vice versa, because condensation may occur inside the system.
- Operate the PA-6822 in strong vibration may cause hard disk failure.
- Do not place the system too close to any radio-active device. Radio-active device may cause signal interference.
- Always shutdown the operating system before turning off the power.

3. Handling

- Avoid placing heavy objects on the top of the system.
- Do not turn the system upside down. This may cause the hard drive to malfunction.
- Do not allow any objects to fall into this product.
- If water or other liquid spills into this product, unplug the power cord immediately.

4. Good Care

- When the outside case gets stained, remove the stains using neutral washing agent with a dry cloth.
- Never use strong agents such as benzene and thinner to clean the surface of the case.
- If heavy stains are present, moisten a cloth with diluted neutral washing agent or alcohol and then wipe thoroughly with a dry cloth.
- If dust is accumulated on the case surface, remove it using a special vacuum cleaner for computers.
- Do not replace the motherboard battery by yourself, or serious damage may occur.